Preface

PV200 special inverters are developed for power supply of water pumps, based on the core control arithmetic of FR200 vector control inverters, combined with the control requirements of PV water pump application. The function of maximum power tracking, dormant at weak light, wake up at strong light, high water level dormant, under-load pre-warning and other control protection functions can ensure normal operation of water pumps according to the customers' requirements to switch to the grid power supply.

Please refer to this manual to commission the inverter, product maintenance refer to FR200 user manual.

IMPORTANT NOTES
◆To illustrate the details of the products，pictures in this manual based on products with outer casing or safety cover being removed. When using this product, please be sure to well install outer casing or covering by the rules, and operating in accordance with the manual contents. ◆The illustrations in this manual are for illustration only and may vary with different products you have ordered. ◆The company is committed to continuous improvement of products, product features will continue to upgrade, the information provided is subject to change without notice. ◆If there is any questions when using, please contact our regional agents or our customer service center:(+86-0755-33067999) ◆For other products, please visit our website. http://www.frecon.com.cn

Contents

Chapter OneProductOverview

1.1 Name Plate

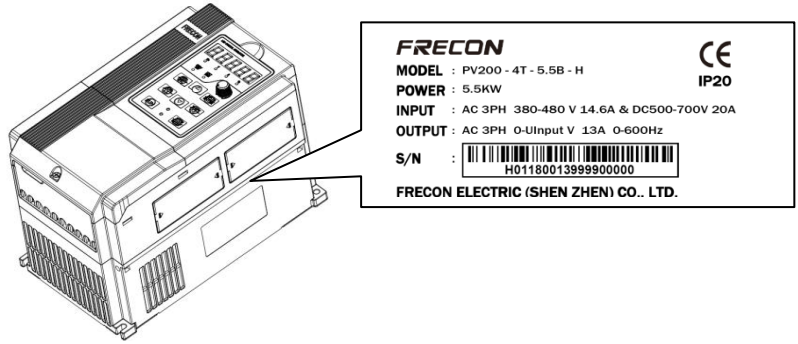

Figure 1-1 Name Plate

Model Instruction

Model numbers on name plate consist of numbers, symbols, and letters, to express its respective series, suitable power type, power level and other information.

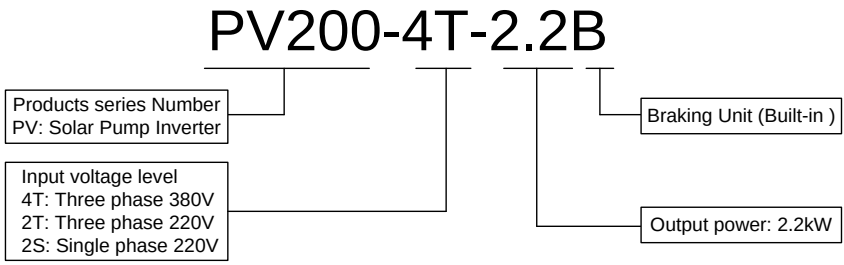

Figure 1-2 Product Model Naming Rules

1.2 Product Specifications

1.2.1 Electric specification of AC220V and DC310V Input product

Table 1-1Electric specification of AC220V and DC310V Input product

Model No.	Recommended Solar Array Power kWP	Maximum Input DC Current A	Output Current A	Adaptive Motor kW	Size of the Case
PV100-2S-0.2B	0.35	2.5	1.6	0.18, 0.2, 0.25	P1-1
PV100-2S-0.4B	0.6	4.5	2.5	0.37, 0.4	
PV100-2S-0.7B	1.1	7.5	4.2	0.75	
PV100-2S-1.5B	2.25	10	7.5	1.5	P1-2
PV100-2S-2.2B	3.3	18	9.5	2.2	
PV100-2T-0.2B	0.35	2.5	1.6	0.18, 0.2, 0.25	P1-1
PV100-2T-0.4B	0.6	4.5	2.5	0.37, 0.4	
PV100-2T-0.7B	1.1	7.5	4.2	0.75	
PV100-2T-1.5B	2.25	10	7.5	1.5	P1-2
PV100-2T-2.2B	3.3	18	9.5	2.2	
PV200-2T-0.7B	3.5	5.3	5	0.18, 0.2, 0.25	P2-1
PV200-2T-1.5B	5.5	8.5	8	0.37, 0.4	P2-2
PV200-2T-2.2B	7.5	11.6	11	2.2	
PV200-2T-4.0B	11.7	18	17	4.0	
PV200-2T-5.5B	17.3	26.5	25	5.5	P2-3
PV200-2T-7.5B	22	33.5	32	7.5	
PV200-2T-011B	31	47.5	45	11	P2-4
PV200-2T-015B	41.5	63	60	15	
PV200-2T-018	52	79	75	18	P2-5
PV200-2T-022	63	96	91	22	
PV200-2T-030	77.5	118	112	30	P2-6
PV200-2T-037	104	158	150	37	
PV200-2T-045	122	185	176	45	P2-7

PV200-2T-055	145	221	210	55	
PV200-2T-075	173	263	250	75	

Input specification	
PV Input	
Maximum Input DC Voltage	400VDC
Recommended Voc Range	320～370VDC
Recommended MPPT Voltage Range	250～350VDC
Starting Voltage Range	120～450VDC
Grid or backup generator input	
Input voltage	Single phase 220V(-15%～30%)
Output specification	
Rated output voltage	3PH 220V
Output frequency	0～600.00Hz（default: 0～50.00Hz）
Protection	
Built-in Protection	Lighting Protection, over-current, overvoltage, output phase-lose, under-load, under-voltage, short circuit, overheating, water pump run dry etc.

1.2.2 Electric specification of AC 380V&DC 540V Input product

Table 1-2Electric specification of AC 380V&DC 540V Input product

Model No.	Power Capacity kVA	Input Current A	Output Current A	Adaptive Motor kW	Size of the case
PV100-4T-0.7B	1.5	3.4	2.5	0.75	P1-2
PV100-4T-1.5B	3	5.0	4.2	1.5	
PV100-4T-2.2B	4	5.8	5.5	2.2	
PV100-4T-4.0B	6	11	9.5	3.7、4	
PV200-4T-0.7B	1.5	3.4	2.5	0.75	P2-1

PV200-4T-1.5B	3	5.0	4.2	1.5	
PV200-4T-2.2B	4	5.8	5.5	2.2	
PV200-4T-4.0B	6	11	9.5	3.7、4	P2-2
PV200-4T-5.5B	8.9	14.6	13	5.5	
PV200-4T-7.5B	11	20.5	17	7.5	
PV200-4T-011B	17	26	25	11	P2-3
PV200-4T-015B	21	35	32	15	
PV200-4T-018B	24	38.5	37	18.5	P2-4
PV200-4T-022B	30	46.5	45	22	
PV200-4T-030B	40	62	60	30	
PV200-4T-037	57	76	75	37	P2-5
PV200-4T-045	69	92	91	45	
PV200-4T-055	85	113	112	55	P2-6
PV200-4T-075	114	157	150	75	
PV200-4T-090	134	160	176	90	P2-7
PV200-4T-110	160	190	210	110	
PV200-4T-132	192	232	253	132	
PV200-4T-160	231	282	304	160	P2-8
PV200-4T-185	240	326	350	185	
PV200-4T-200	250	352	377	200	

Input specification	
PV Input	
Maximum Input DC Voltage	800VDC
Recommended Voc Range	500～700VDC
Recommended MPPT Voltage Range	450～600VDC
Starting Voltage Range	250～800VDC

Grid or backup generator input	
Input Voltage	Three phase 380V(-15%～30%)
Output specification	
Rated output voltage	3PH 380V
Output frequency	0～600.00Hz（Default 0～50.00Hz）
Protection	
Built-in Protection	Lighting Protection, over-current, overvoltage, output phase-lose, under-load, under-voltage, short circuit, overheating, water pump run dry etc.
General Parameters	
Application Site	No direct sunshine, no dust、corrosive gas、combustible gas、oil mist、steam、dripping or salinity etc.
Altitude	0～2000 m Derated use above 1000m,per 100m, the rated output current decrease 1%.
Environment Temperature	-10℃～40℃ (Environment Temperature be 40℃～50℃, please keep derated use.)
Humidity	5～95%,non-condensation
Vibration	less than 5.9 m/s^2（0.6g）
Storage Temperature	-20℃～+70℃
Efficiency	Rated Power Run≥95%
Installation	Wall or rail mounting
Protection Grade	IP20
Cooling	Forced Air Cooling

1.3 Dimension Drawing

1.3.1 PV100

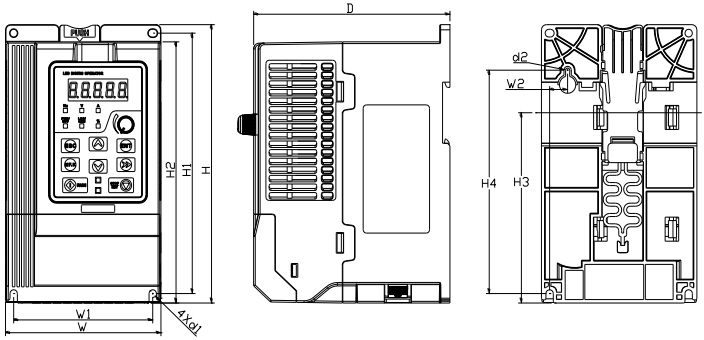

Table 1-3PV100 Size Table

Model No.	Dimensions and installation size（mm）											kG
	W	H	D	W1	W2	H1	H2	H3	H4	d1	d2	
P1-1	95	162	120	85	11	151.5	152	110.8	130	4.5	4.5	1.1
P1-2	110	173	135	100	11	163	163	121.8	140.5	4.5	5	1.5

1.3.2 PV200

a:0.75～15kW Dimensions and wall mounting dimensions

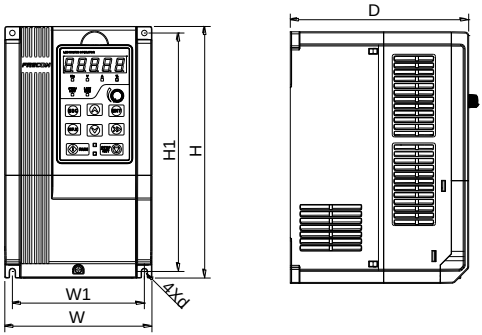

Figure 1-30.75～15kW Wall Installation Diagram

b: 18.5～200kW Dimensions and installation dimensions

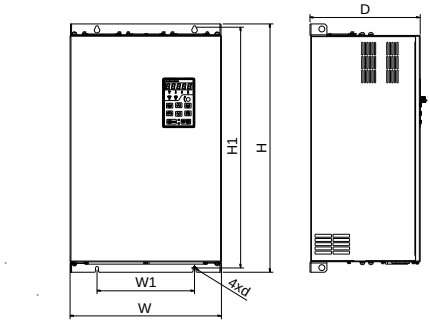

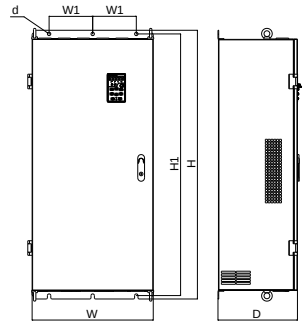

Figure 1-418.5～30kW Wall Mounting Diagram **Figure 1-5 37~200kw Wall Mounting Diagram**

Table 1-4 Wall Mounting Size Table

Model No.	Dimensions and installation size（mm）						Weight（Kg）
	W	W1	H	H1	D	Installation Aperture	
P2-1	117	106.6	187	176.6	160	4.5	2.2
P2-2	146	131	249	236	177	5.5	3.2
P2-3	198	183	300	287	185	5.5	5.4
P2-4	255	176	459	443	220	7	15.5
P2-5	270	130	590	572	260	7	27.5
P2-6	357	230	590	572	260	7	37
P2-7	430	320	829.5	802	293	12	77.7
P2-8	500	180	1107	1078	328	14	138.5

Chapter Two Commissioning Guide

2.1 PV Panel Power Supply Commissioning

1. Wiring drawings of below inverters shown as Figure 2-1: PV100 series, PV200 series 3 phase 220V inverters with power lower than 15kw and 3 phase 380V inverters with power lower than 30kw.

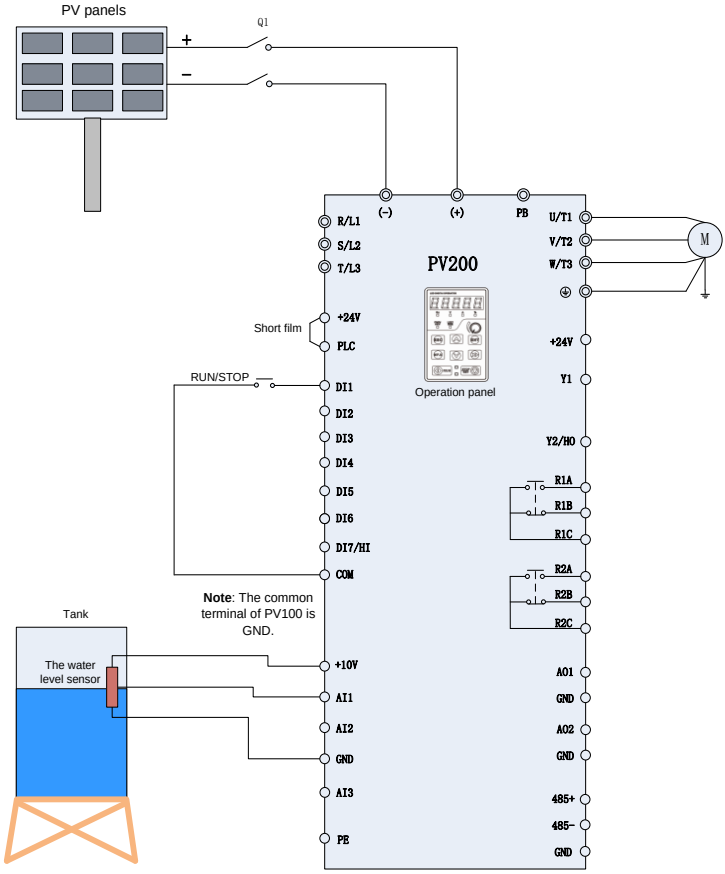

Figure 2-1 PV Cell Power Supply Wiring Diagram 1

Wire drawings of below inverters shown as Figure 2-2: PV200 series 3 phase 220V inverters with power higher than 18kw and 3phase 380V inverters with power higher than 37kw.

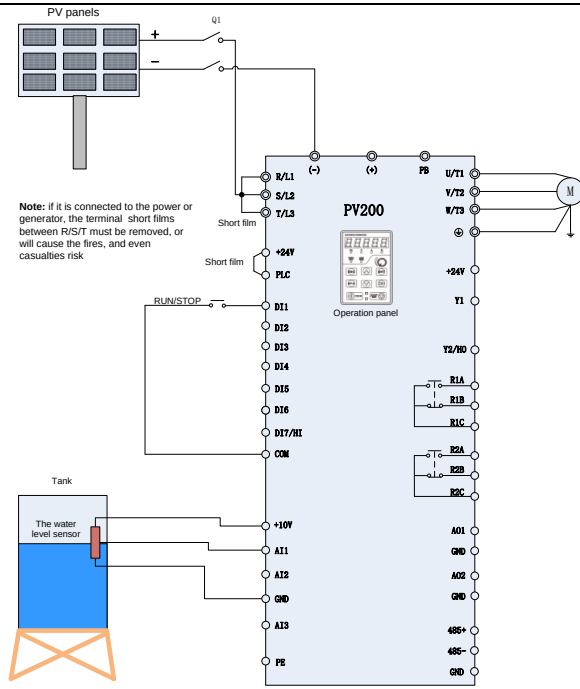

Figure 2-2 PV Cell Power Supply Wiring Diagram 2

1. Please wirings as Figure 2-1 or Figure 2-2 according to different inverter powers, check and confirm the wirings to be correct, and then close Q1.

2. Setting the Motor Parameters

   Setting the parameter of name plate on motor F08.01～F08.05。

3. Testing the water yield of pump

   Press the operation key “RUN”, under normal circumstance of light strength, if the operation frequency low or water yield less, which means the motor wiring may be reversed, please exchange two wirings of motor.

4. System Effluent Speed PI Regulating

   If the user has a high requirements for the effluent speed, PI parameters can be regulated appropriately（H00.09～H00.10）, the larger PI parameter, the stronger affection, the faster effluent, but the larger fluctuation of motor frequency; Otherwise, the slower water effluent, the more steady frequency of motor operation.

5. MPPT Tracing Speed Commissioning

   H00.04 and H00.05 are respectively the lowest voltage and highest voltage under the MPPT mode, the smaller the range between them two, the faster tracing the maximum power, but the premise if

that the bus voltage during normal operation must fall within this range, or the maximum power point may not be tracked. Generally speaking, the factory default value is OK.

6. Setting of fault point and fault delay reset time

If clients need to use the pre-warning of weak light, water-logged, under-load, failure monitoring point, delay time and reset time, water-logged/controlled function can be set as H00.15~H00.19 on demand; under-load function set as H00.20~H00.22; weak light function set as H00.13~H00.14. Users also can adopt the default value.

7. Parameter setting after the system operation normally

When the water yield is normal, and system run steadily, the commissioning will be finished. And then setting F02.00=1, change to terminal operation mode, setting failure auto reset times F11.27=5.

2.2 Grid or Generator power supply wirings

Wiring drawings of below inverters shown as Figure 2-3: PV100 series, PV200 series 3 phase 220V inverters with power lower than 15kw and 3 phase 380V inverters with power lower than 30kw.

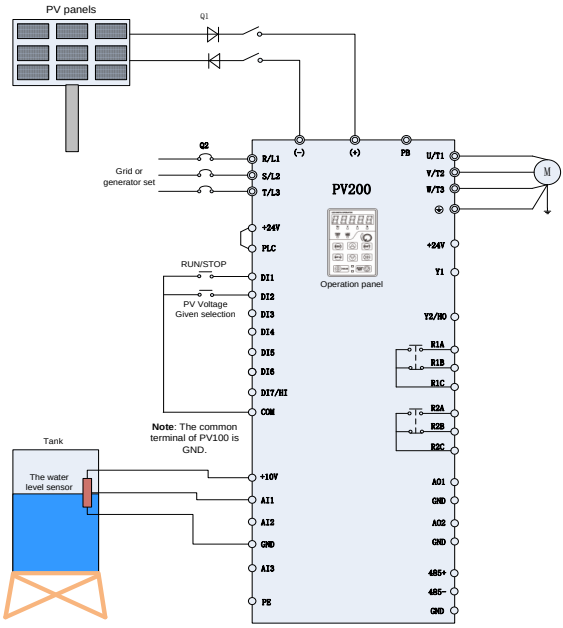

Figure 2-3 Grid or Generator Power Supply Wiring Diagram 1

Wire drawings of below inverters shown as Figure 2-4: PV200 series 3 phase 220V inverters with power higher than 18kw and 3phase 380V inverters with power higher than 37kw.

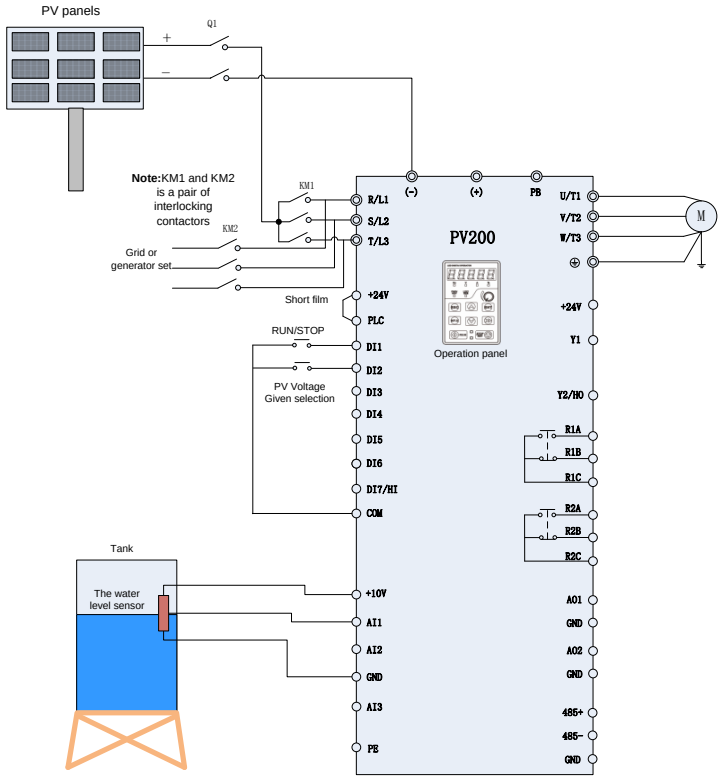

Figure 2-4 Grid or Generator Power Supply Wiring Diagram 2

1. Wirings as Figure 2-3 system wiring drawings according to inverters power, check and confirm the connections to be correct.
2. Disconnect the switch Q1, and then close Q2, switch to grid or diesel engine power; disconnect Q2, and then close Q1, switch to PV power supply; Figure 2-4 show inter-locking connection between connector KM1 and KM2, KM1 close is PV power supply, KM2 close is grid or generator power supply.
3. When grid or generator power supply, setting H00.01=0, power supplied by grid.
4. For water pump's frequency, please refer to F01 group code, H00.02~H00.12 function code does not work.
5. When change to PV power supply, setting F04.1=38 and close the terminal DI2 (or setting H00.01=1).

Note:

When the bus input terminal does not install the diode protection, PV panel switch Q1 will be prohibited to close together with grid power input switch Q2, or the panel will be damaged.

2.3Wiring diagram between FRECON VFD and single phase motor

2.3.1 Single phase motor introduction

Single phase motor generally means asynchronous single phase motor powered by single phase AC 220V, there're two phase winding in motor stator and motor rotor is common squirrel cage. The distribution of two phase winding and different power supply will lead to different starting characteristics and operating characteristics

Usually single phase motor is with single capacitor or double capacitor, photos of motor are as below:

Figure 2-5 Motor with single capacitor and double capacitor

Single phase motor is consisted of main winding, secondary winding, capacitor and centrifugal switch, internal wiring of single phase motor with single capacitor is as below:

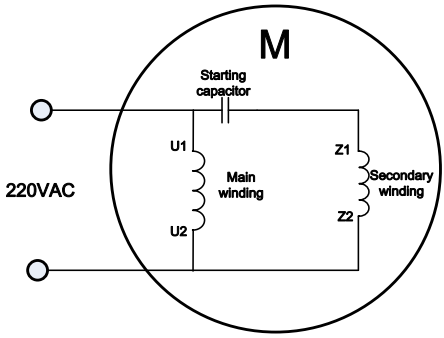

Figure 2-6 Operation mode: Internal wiring of motor with single capacitor

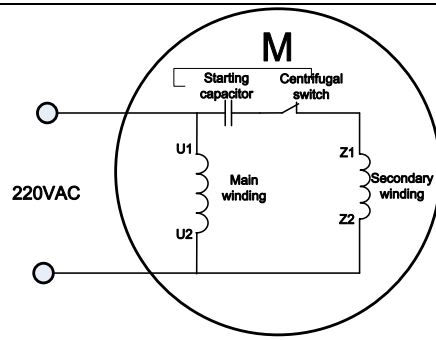

Figure 2-7 Starting mode: Internal wiring of motor with single capacitor

Internal wiring of single phase motor with double capacitors is as below:

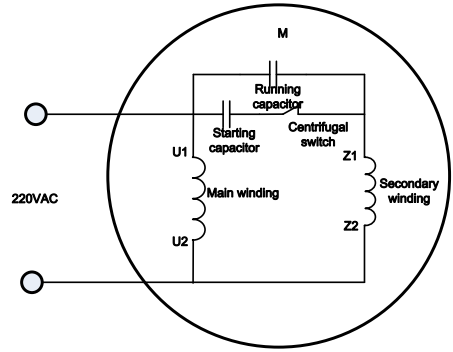

Figure 2-8 Internal wiring of motor with double capacitors

Resistor starting mode single phase motor, and internal wiring is as below:

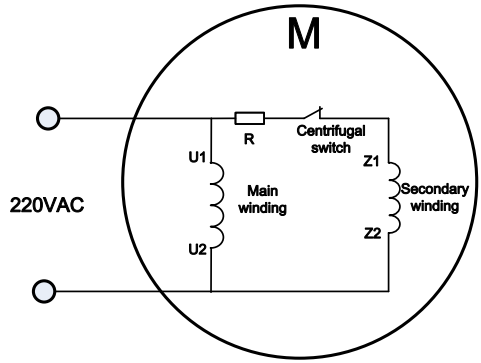

Figure 2-9 Resistor starting mode: Internal wiring of motor

We can remove capacitors from above motors, and remaining 4 main and secondary winding

terminals as below:

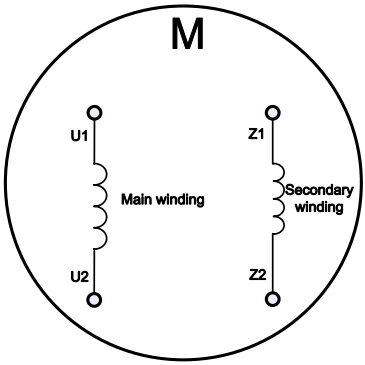

Figure 2-10 Main and secondary winding of motor

2.3.2 Wiring between VFD and motor（Capacitor removable）

Connect main and secondary winding of motor to inverter UVW, then inverter can work. But due to the motor winding difference, motor forward wiring must be as below, if not cause motor too heat

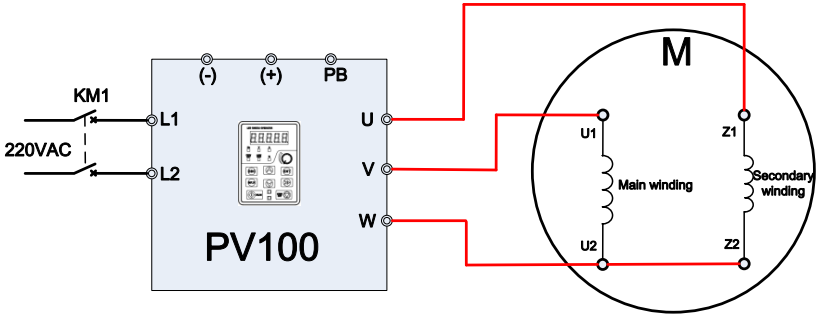

Figure 2-11 Forward wiring between PV100 VFD and motor

Motor reverse can't be completed through parameter setting of inverter or change any two phase wirings, motor reverse wiring must be as below:

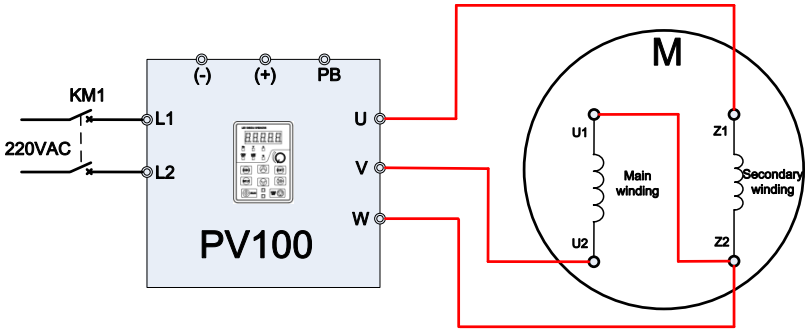

Figure 2-12 Reverse wiring between PV100 VFD and motor

Motor forward and reverse wiring of 0.75Kw/220V PV200 is same with PV100, and wiring of PV200 above 1.5kW are as below:

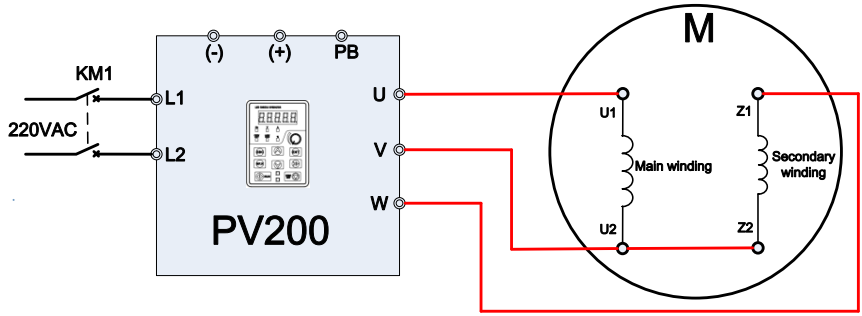

Figure 2-13 Forward wiring between VFD PV200 (Above 1.5Kw) and motor

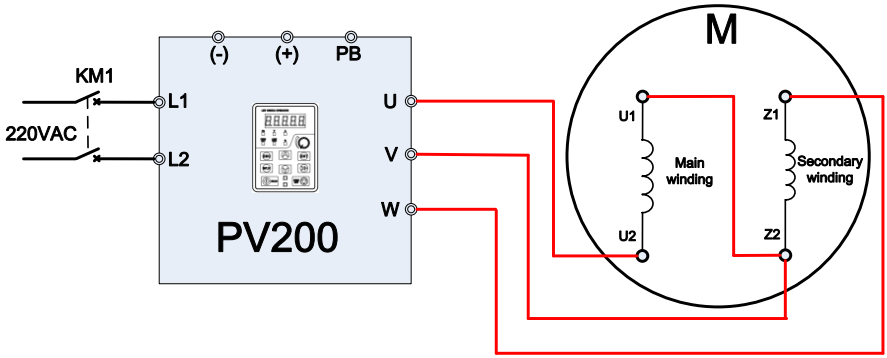

Figure 2-14 Reverse wiring between VFD PV200 (Above 1.5Kw) and motor

Note: After wiring completed, need to set F08.00=2.

2.3.3 Wiring between VFD and motor（Capacitor is not removable）

If the capacitor in motor is not removable, the wiring is as below. The forward and reverse is determined by UV wiring sequence.

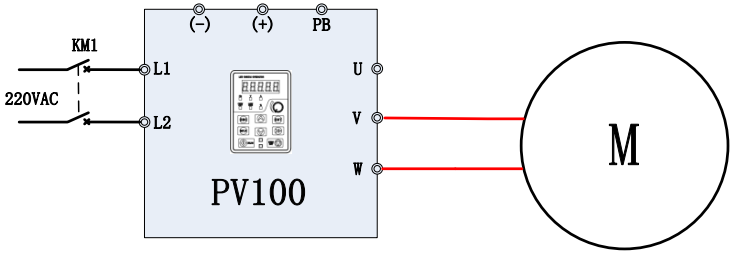

Figure 2-15 Wiring between PV100 VFD and motor

Wiring of 0.75Kw/220V PV200 is same with PV100, and wiring of PV200 above 1.5kW/220Vis as below. The forward and reverse is determined by UV wiring sequence.

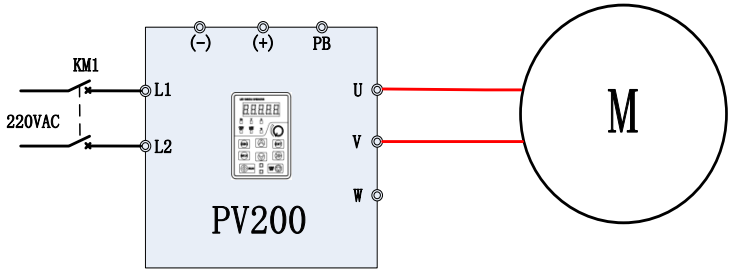

Figure 2-16 Reverse wiring between VFD PV200 (Above 0.75Kw) and motor

Note: After wiring completed, need to set F08.00=3

2.4Product Terminal Configuration

2.4.1 Main Circuit Terminals

0.75～200KW main circuit terminals

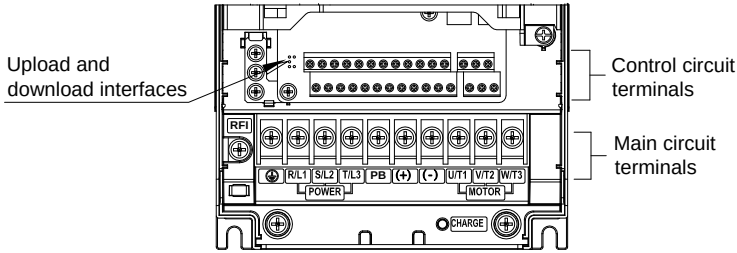

Figure 2-17 0.75～200kW Main Circuit Terminal Diagram

Table 2-1 Functions of Inverter Main Circuit Terminals

Terminal Label	Description
R/L1、S/L2、T/L3	AC Power Input Terminal, connected to three-phase 380V AC power.
U/T1、V/T2、W/T3	Inverter AC output terminal, connected to three-phase AC motor
(+)、(-)	Respectively to be positive and negative terminal of internal DC bus
PB	Braking resistor connection terminals, one end connected to (+), the other end of PB.
⏚	Ground terminal, connected to the earth.

2.4.2 Control Circuit Terminals

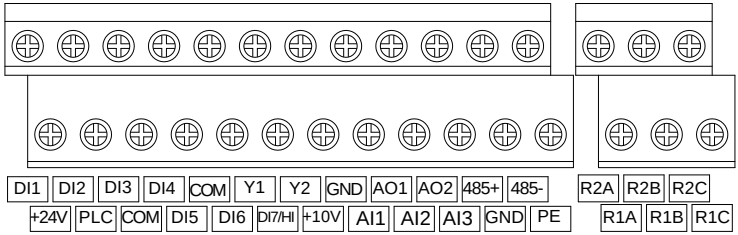

Figure 2-16Control Terminals Diagram

Table 2-2 PV200 Inverter Control Circuit Terminal Functions

Type	Terminal Symbol	Terminal Name	Description
Power Supply	+10V-GND	＋10V Power Supply	Output +10V Power Supply, Maximum Output Current: 10mA. Generally use for power supply of external potentiometer, resistance range of potentiometer: 1～5kΩ
	+24V-COM	24V Power Supply	Output +24V power supply, generally use for power supply of digital input/output

			terminal and external sensor, maximum output current: 200mA.
	PLC	External Power Input Terminal	Factory default in connection with +24V, when using an external signal to drive DI1~DI7, PLC need to be connected to external power, and disconnected with +24V power terminal.
Analog Input	AI1-GND	Analog Input Terminal 1	Input Range: DC 0～10V/0～20mA, selected by AI1、AI2 toggle switches on control board. Input Impedance: 250kΩ for voltage input, 250Ω for current input.
	AI2-GND	Analog Input Terminal 2	
	AI3-GND	Analog Input Terminal 3	Input voltage range: DC -10～+10V Input Impedance: 250kΩ
Digital Input	DI1- COM	Digital Input Terminal 1	Maximum input frequency: 200Hz Input Impedance: 2.4kΩ Voltage Range of level-input:9V～30V
	DI2- COM	Digital Input Terminal 2	
	DI3- COM	Digital Input Terminal 3	
	DI4- COM	Digital Input Terminal 4	
	DI5- COM	Digital Input Terminal 5	
	DI6- COM	Digital Input Terminal 6	
	DI7/HI-COM	Digital Input Terminal 7 or high-speed pulse input	Besides the features of DI1~DI6, DI7 also can be the channel of high-speed pulse input. Maximum input frequency: 100kHz.
Analog Output	AO1-GND	Analog Output Terminal 1	Output range：DC 0～10V/0～20mA, selected by A01、A02 toggle switches on control board. Impedance required≥10kΩ
	AO2-GND	Analog Output Terminal 2	
Digital Output	Y1-COM	Open Collector Output 1	Voltage Range: 0～24V Current Range: 0～50mA
	Y2/HO-COM	Open Collector Output 2or high-speed	Apart from Y1 characteristics, Y2 also can be the channel of high-speed pulse input. Maximum output frequency:

		pulse output	100kHz.
Relay Output	R1A-R1C	normal open terminal	Contact driving ability: AC250V，3A，COSØ=0.4。 DC 30V，1A
	R1B-R1C	normal close terminal	
	R2A-R2C	normal open terminal	
	R2B-R2C	normal close terminal	
485 Communication	485+-485-	485 Communication Terminals	Speed: 4800/9600/19200/38400/57600/115200bps. RS485 toggle switch on control board, setting the terminal matching-resister
	GND	485 Communication Shield Ground	
Shielded	PE	Shield Grounding	It's use for grounding the shield of terminal-wire
Aid Interface		External Keyboard Interface	When connected to operation board, the longest communication distance is up to 50m, adopt the standard network cable (RJ45)
	UP/DOWNLOAD	Parameter Copy Card Interface	

Note:the common termial (COM) of the PV100 series is GND.

Chapter Three Function Parameters

3.1 The Basic Function Parameters

Table 3-1 Basic Function Parameters

Function Code	Name	Descriptions	Default Value	Attribute
F00 Group: System Parameters				
F00.00	User Password	0～65535	0	×
F00.04	Default Value Control	0: Null 1: Factory Reset(Excluding motor parameters） 2: Clear the record information of fault 3: Backup user's current parameters 4: User's backup parameters were restored 5: Restore factory default(include motor parameter) 6: Power consumption zero clearing(U00.35)	0	×
F00.13	Carrier frequency	0.700～16.000kHz	Model defined	△
F00.18	Fan control	0: Run at power-on 1: Fan working during running	1	×
F00.20	Inverter rated power	0.2～710.0kW	Model defined	⊙
F00.21	Inverter rated voltage	60～660V	Model defined	⊙
F00.22	Inverter rated current	0.1～1500.0A	Model defined	⊙
F00.23	Software version	0.00～655.35	Model defined	⊙
F00.24	Dealer password	0～65535	0	×
F00.25	Setting operation time	0～65535h(0: Invaild)	0h	×

F01 Group: Frequency Given				
F01.01	Master Frequency Command Source	0: Master digital setting (F01.02) 1: keypad potentiometer 2: Analog input AI1 3: Communication 4: Multi-reference 5: PLC 6: Process PID output 7: X7/HI pulse input 8: AI2 9: AI3	1	×
F01.02	Digital Setting of Master Frequency	0.00～Fmax	0.00Hz	△
F01.08	Maximum Frequency（Fmax)	20.00～600.00Hz	50.00Hz	×
F01.09	Upper Limit Frequency(Fup)	Fdown～Fmax	50.00Hz	×
F01.10	Lower Limit Frequency(Fdown)	0.00～Fup	0.00Hz	×
F01.11	Given frequency lower than the frequency control of lower limit	0：Run by the lower frequency 1：After running time of lower limit frequency, it will run on speed of 0.	0	×
F01.12	Running time of lower limit frequency	0.0～6000.0s	60.0s	×
F02 Group: Control of Run/Stop				
F02.00	Command Source Selection of Run/Start	0: Operation Panel（LED off） 1: External Terminal（LED on） 2: Computer Communications（LED flash）	1	×
F02.12	Stop mode	0: Ramp to stop 1: Coast to stop	0	×
F03 Group: Acceleration/Deceleration Time				
F03.00	Acceleration Time 1	0.0～6000.0s	15.0s	△
F03.01	Deceleration Time 1	0.0～6000.0s	1.0s	△
F04 Group: Digital Input Terminals				

F04.00	Terminal DI1 Function Selection	00:No function 01:Running forward (FWD) 02:Running reverse (REV) 03:Three-wire control 04:JOG forward 05:JOG reverse 06:Coast to stop 07:Fault reset (RESET) 08:Running suspended 09:External fault input 10:Terminal UP 11:Terminal DOWN 12:UP/DOWN (including ∧/∨ key) adjustment clear 13:Multi-stepfrequency terminal 1 14:Multi-step frequency terminal 2 15:Multi-step frequency terminal 3 16:Multi-step frequency terminal 4 17:Accel/Decel time determinant 1 18:Accel/Decel time determinant 2 19:Accel/Decel disabled(ramp stop not inclusive) 20:Switch to auxiliary speed setting 21:PLC status reset 22:Simple PLC paused 23:Simple PLC paused 24:PID adjustment direction 25:PID integration paused 26:PID parameter switch 27:Swing frequency pause(output the currentfrequency) 28:Swing frequency reset(output the central frequency) 29:Run command switched to keypad contro 30:Run command switched to terminal control	1	×
F04.01	Terminal DI2 Function Selection		51	×
F04.02	Terminal DI3 Function Selection		52	×
F04.03	Terminal DI4 Function Selection		52	
F04.04	Terminal DI5 Function Selection		0	
F04.05	Terminal DI6 Function Selection		0	
F04.06	Terminal DI7 Function Selection		0	×

		31:Run command switched to communication control 32:Count input 33:Count clear 34:Length count 35:Length clear 36:DC brake input command at stop 37～49:reserved 50:Special Machine Enabled 51:Solar Panels Power Enabled 52:Overtank or dry run switch dormancy		
F04.10	Filtering time of digital input terminal	0.000～1.000s	0.010s	△
F04.11	Delay time of terminal DI1	0.0～300.0s	0.0s	△
F04.12	Delay time of terminal DI2	0.0～300.0s	0.0s	△
F04.13	Terminal DI1～DI5 positive/negative logic	DI5、DI4、DI3、DI2、DI1 0: Positive logic(Terminals are on at 0V/off at 24V) 1: Negative Logic (Terminals are off at 0V/on at 24V)	00000	×
F04.14	Terminal DI6～AI3 positive/negative logic	AI3、AI2、AI1、DI7、DI6 0: Positive logic 1: Negative Logic	00000	×
F05 Group: Digital Output Terminal				
F05.00	Y1 Output Function Selection	00: No output 01: Drive is running 02: Fault output 03: Frequency-level detection FDT1 output 04: Frequency-level detection FDT2 output 05: Drive in 0Hz running 1(no output at stop)	1	×
F05.01	Y2 Output Function Selection		2	
F05.02	Relay R1 Output Function Selection		30	
F05.03	Relay R2 Output Function Selection		11	×

		06: Drive in 0Hz running 2(output at stop) 07: Upper limit frequency attained 08: Lower limit frequency attained 09: Frequency attained 10: Inverter is ready to work 11: Drive (motor) overloaded alarm 12: Inverter overheat warning 13: Current running time attained 14: Accumulative power-on time attained 15: Consecutive running time attained 16: PLC cycle completed 17: Set count value attained 18: Designated count value attained 19: Length attained 20: Under load alarm 21: Brake 22～29:reserved 30:Automatic switch of grid power and solar power		
F05.08	Enabled state of digital output	Unit's place: Y1 0: Positive logic 1: Negative logic Decade: Y2 (same as unit's place) Hundreds place: Relay 1 output (same as unit's place) Thousands place: Relay 2 output (same as unit's place)	0000	×
Group F06 Analog and Pulse Input				
F06.00	Minimum input of curve AI1	0.0%～input of inflection point1 of curve AI1	0.0%	△
F06.01	Set value corresponding to minimum input of	-100.0～100.0%	0.0%	△

	curve AI1			
F06.02	Input of inflection point 1 of curve AI1	Minimum input of curve AI1～Input of inflection point 2 of curve AI1	100.0 %	△
F06.03	Set value corresponding to input of inflection point 1 of curve AI1	-100.0～100.0%	100.0 %	△
F06.04	Input of inflection point 2 of curve AI1	Input of inflection point 1 of curve AI1～Maximum input of curve AI1	100.0 %	△
F06.05	Set value corresponding to input of inflection point 2 of curve AI1	-100.0～100.0%	100.0 %	△
F06.06	Maximum input of curve AI1	Input of inflection point 2 of curve AI1～100.0%	100.0 %	△
F06.07	Set value corresponding to maximum input of curve AI1	-100.0～100.0%	100.0 %	△
F06.08	Minimum input of curve AI2	0.0%～input of inflection point1 of curve AI2	0.0%	△
F06.09	Set value corresponding to minimum input of curve AI2	-100.0～100.0%	0.0%	△
F06.10	Input of inflection point 1 of curve AI2	Minimum input of curve AI1～Input of inflection point 2 of curve AI2	100.0 %	△
F06.11	Set value corresponding to input of inflection point 1 of curve AI2	-100.0～100.0%	100.0 %	△
F06.12	Input of inflection point 2 of curve AI2	Input of inflection point 1 of curve AI2～Maximum input of curve AI2	100.0 %	△

F06.13	Set value corresponding to input of inflection point 2 of curve AI2	-100.0～100.0%	100.0 %	Δ
F06.14	Maximum input of curve AI2	Input of inflection point A of curve AI2～100.0%	100.0 %	Δ
F06.15	Set value corresponding to maximum input of curve AI2	-100.0～100.0%	100.0 %	Δ
F07 Group: Analog and Pulse Output				
F07.00	AO1 Output Function Selection	00: No Output	1	×
F07.01	AO2 Output Function Selection	01: Output Frequency	2	×
F07.02	Y2/HO Output Function Selection（When used as HO)	02: Set Frequency	1	×
		03: Output Current（Inverter Rated Current）		
		04: Output Voltage（Inverter Rated Voltage）		
		05: Output Power		
		06: Bus Voltage		
		07: +10V		
		08: Keyboard Potentiometer		
		09: AI1		
		10: AI2		
		11: AI3		
		12: HI Input(100.0% corresponds 100.00kHz)		
		13: Output Torque(Absolute Value of the Torque)		
F08 Group: Motor 1 Basic Parameters				
F08.00	Motor type	0:Three phase asynchronous motor 1: Reserved 2:Single phase asynchronous	0	×

		motor(Remove capacitance) 3: Single phase asynchronous motor(Not Remove capacitance)		
F08.01	Motor 1 Rated Power	0.10～600.00kW	Type fixed	×
F08.02	Motor 1 Rated Voltage	60～660V	Type fixed	×
F08.03	Motor 1 Rated Current	0.1～1500.0A	Type fixed	×
F08.04	Motor 1 Rated Frequency	20.00～Fmax	Type fixed	×
F08.05	Motor 1 Rated Rotational Speed	1～30000	Type fixed	×
F08.06	Motor 1 Wirings	0: Y 1: Δ	Type fixed	×
F08.07	Motor 1 Rated Power Factor	0.50～0.99	Type fixed	×
F08.08	Asynchronous Motor 1 Stator Resistance R_1	0.001～65.535Ω	Type fixed	×
F08.09	Asynchronous Motor 1 Rotor Resistance R_2	0.001～65.535Ω	Type fixed	×
F08.10	Asynchronous Motor 1 Leakage Inductance	0.001～65.535mH	Type fixed	×
F08.11	Asynchronous Motor 1 Mutual Inductance	0.1～6553.5mH	Type fixed	×
F08.12	Asynchronous Motor 1 No-load Field Current	0.1～1500.0A	Type fixed	×
F08.13	Asynchronous Motor 1 field-weakening coefficient 1	0.0～100.0	87%	×
F08.14	Asynchronous Motor 1 field-weakening coefficient 2	0.0～100.0	75%	×
F08.15	Asynchronous Motor 1 field-weakening coefficient 3	0.0～100.0	70%	×

F08.30	Parameters Self-identification	0：Null 1：Asynchronous Motor Static Self-identification 2：Asynchronous Motor Rotation Self-identification	0	×
F09 Group: Motor 1VF Curve				
F09.00	Motor 1VF Curve Setting	0: Straight Line V/F 1: Multipoint V/F 2: 1.2th power of the V/F curve 3: 1.4th power of the V/F curve 4: 1.6th power of the V/F curve 5: 1.8th power of the V/F curve 6: 2.0th power of the V/F curve 7: VF Completed Separation Mode 8: VF Semi-separation Mode	0	×
F09.01	Motor 1 Torque Boost	0.0～30.0%　　0.0%：（Auto Torque Boost）	0.0%	△
F09.02	Motor 1 Cut-off frequency of Torque-Boost	0.00～Maximum Frequency	50.00Hz	△
F09.03	Motor 1Multipoint V/F frequency points 1	0.00～F09.05	0.00Hz	△
F09.04	Motor 1 Multipoint VF Voltage Points 1	0.0～100.0	0.0%	△
F09.05	Motor 1 Multipoint V/F frequency points 2	F09.03～F09.05	5.00Hz	△
F09.06	Motor 1 Multipoint VF Voltage Points 2	0.0～100.0	14.0%	△
F09.07	Motor 1 Multipoint V/F frequency points 3	F09.05～F09.09	25.00Hz	△
F09.08	Motor 1 Multipoint VF Voltage Points 3	0.0～100.0	50.0%	△
F09.09	Motor 1 Multipoint V/F frequency points4	F09.07～Rated Frequency of Motor	50.00Hz	△
F09.10	Motor 1 Multipoint VF Voltage Points 4	0.0～100.0　　Ue=100.0%	100.0%	△

F09.11	VF Slip Compensation Gain	0.0～300.0%	80.0%	Δ
F09.12	VF Stator Voltage-drop Compensation Gain	0.0～200.0%	100.0 %	Δ
F09.13	VF Excitation Compensation Gain	0.0～200.0%	100.0 %	Δ
F09.14	VF Oscillation Suppression Gain	0.0～300.0%	100.0 %	Δ
F11 Group: Fault and Protection				
F11.00	Control of Overcurrent Stall	0：Null 1：Overcurrent Stall Mode 1 2: Overcurrent Stall Mode 2	2	×
F11.01	Protection current of Overcurrent Stall	100.0～200.0%	150.0 %	×
F11.02	Frequency Fall Time of Constant Speed Overcurrent Stall	0.0～6000.0s (Mode 1 is Active）	5.0s	Δ
F11.03	Overcurrent Stall Mode 2 Proportion Coefficient	0.1～100.0%	3.0%	Δ
F11.04	Overcurrent Stall Mode 2 Integral Time	0.00～10.00s （0.00：Integral Invalid）	10.00s	Δ
F11.05	Control of Overvoltage Stall	0: Null 1: Overvoltage Stall Mode 1 2: Overvoltage Stall Mode 2	0	×
F11.06	Voltage of Overvoltage Stall	600～800V	700V	×
F11.07	Overvoltage Stall Mode 2 Proportion Coefficient	0.1～100.0%	3.0%	Δ
F11.08	Overvoltage Stall Mode 2 Integral Time	0.00～10.00s （0.00：Integral Invalid）	10.00s	Δ

F11.10	Selection of failsafe action 1	Ones: Bus Under voltage Protection（Err07) 0:Reporting faults and freely parking 1:Alarming and parking by deceleration mode 2:Alarm and continue running on fault frequency 3:Protection Invalid	03000	×
		Tens: Input Phase-protection (Err09)		
		Hundreds: Output Phase-protection (Err10)		
		Thousands: Motor Overload Protection (Err10)		
		Myriabit: Inverter Overload Protection（Err12)		
F11.11	Selection of failsafe action 2	Ones: External Input Failure-protection（Err13） 0:Reporting faults and freely parking 1:Alarming and parking by deceleration mode 2:Alarm and continue running on fault frequency 3:Protection Invalid	00000	×
		Tens: Memory Failure (Err15)		
		Hundreds: 485 communication timeout (Err18)		
		Thousands: PID feedback disconnection when running（Err19）		
		Myriabit: running time arrives（Err20）		

F11.12	Selection of failsafe action 3	Ones: Disconnection Fault of Temperature Sensor（Err24） 0:Reporting faults and freely parking 1:Alarming and parking by deceleration mode 2:Alarm and continue running on fault frequency 3:Protection Invalid	00	×
		Tens: Inverter load-lost（Err25）		
F11.14	When failure, frequency selection of continue running	0：Running on current setting frequency	0	×
		1：Running on setting frequency		
		2：Running on upper-limit frequency		
		3：Running on lower-limit frequency		
		4：Running on abnormal spare-frequency		
F11.15	Abnormal Alternate Frequency	0.00～Fmax	0.00Hz	×
F11.17	Protection time of Motor Overload	30.0～300.0s	60.0s	×
F11.18	Selection of Overload Pre-warning	Ones: selection of detection 0：always detection 1：detection only when constant speed	00	×
		Tens: condition selection of detection 0：responds to rated current of motor 1：responds to rated current of inverter		
F11.19	Detectable Level of Overload Pre-alarm	20.0～200.0%	130.0 %	×
F11.20	Detectable Time of Overload Pre-alarm	0.1～60.0s	5.0s	×

F11.21	Pre-alarm Temperature of Inverter Overheat	50.0～100.0℃	70.0℃	×
F11.22	Detectable Level of load-loss	5.0～100.0%	20.0%	×
F11.23	Detectable Time of load-loss	0.1～60.0s	5.0s	×
F11.24	Operation selection of instantaneous power failure	0：Null 1：Valid	0	×
F11.25	Frequency deceleration time of instantaneous power failure	0.0～6000.0s	5.0s	△
F11.26	Selection control of fast current-limit	0：Prohibit 1：Permit	0	×
F11.27	Auto-Reset Times of failure	0～20	0	×
F11.28	Auto-Reset Interval of failure	0.1～100.0s	1.0s	×
F11.29	During the fault auto-resetting, program Of switch output terminal , is action selection of output fault	0：No action 1：Action	0	×
F11.30	Instantaneous power off bus voltage	60.0%～Recovery voltage	80.0%	△
F11.31	Instantaneous power off recovery voltage	Power off voltage～100.0%	85.0%	△
F11.32	Instantaneous power off voltage detection time	0.01～10.00s	0.10s	△
F11.33	Instantaneous power off Kp	0.1～100.0%	40.0%	△
F11.34	Instantaneous power off integration time Ti	0.00～10.00s （0.00：Integration invalid）	0.10s	△

Group F13 Process PID				
F13.00	PID setting	0: F13.01 digital setting 1:keypad potentiometer 2：AI1 3: Communication 4：Multi-Reference 5: DI7/HI pulse input 6: AI2 7：AI3	0	×
F13.01	PID digital setting	0.0～100.0%	50.0%	△
F13.02	PID feedback	0：AI1 1：AI2 2: Communication 3：AI1+AI2 4：AI1-AI2 5：Max{AI1，AI2} 6：Min{AI1，AI2} 7: DI7/HI pulse input 8：AI3	0	×
F13.03	PID setting feedback range	0～60000	1000	△
F13.04	PID action direction	0: Forward action	0	×
		1: Reverse action		
F13.05	Filtering time of PID setting	0.000～10.000s	0.000s	△
F13.06	Filtering time of PID feedback	0.000～10.000s	0.000s	△
F13.07	Filtering time of PID output	0.000～10.000s	0.000s	△
F13.08	Proportional gain Kp1	0.0～100.0	1.0	△
F13.09	Integration time Ti1	0.01～10.00s	0.10s	△
F13.10	Differential time Td1	0.000～10.000s	0.000s	△
F13.17	PID offset limit	0.0～100.0%	1.0%	×

F13.18	PID integral property	Unit's digit (Whether to stop integral operation when the output reaches the limit) 0: Continue integral operation 1: Stop integral operation Ten's digit (Integral separated) 0: Invalid 1: Valid	00	×
F13.19	PID differential limit	0.0～100.0%	0.5%	×
F13.20	PID initial value	0.0～100.0%	0.0%	×
F13.21	Holding time of PID initial value	0.0～6000.0s	0.0s	×
F13.22	PID output frequency upper limit	PID output frequency lower limit～100.0%（100.0% corresponds to maximum frequency ）	100.0 %	×
F13.23	PID output frequency lower limit	–100.0% ～ PID output frequency lower limit	0.0%	×
F13.24	Detection value of PID feedback loss	0.1～100.0% 0.0%: Not judging feedback loss	0.0%	×
F13.25	Detection time of PID feedback loss	0.0～30.0s	1.0s	×
F13.26	PID operation at stop	0: No PID operation at stop 1: PID operation at stop	0	×
Group F16 Keys and Display of Keypad Parameters				
F16.01	Keyboard operation disply	Uini's digit: Function selection of STOP/RESET key 0: stop function of STOP/RESET key is valid only in keyboard operation mode 1: Stop function of STOP/RES key is valid in any operation mode Ten's digit: Speed display（U00.05） 0: According to the actual speed 1: Multiply frequency by speed coefficient(F16.11) Hundred's digit: Decimal places 0: No decimal places	001	×

		1: One decimal places 2: Two decimal places 3: Three decimal places		
F16.02	Keys locked option	0: Not locked 1: Full locked 2: Keys locked other than RUN, STOP/RST 3: Keys locked other than STOP/RST	0	×
F16.03	LED displayed parameters setting 1 on running status	0～99(correspond U00.00～U00.99)	0	△
F16.04	LED displayed parameters setting 2 on running status	0～99(correspond U00.00～U00.99)	6	△
F16.05	LED displayed parameters setting 3 on running status	0～99(correspond U00.00～U00.99)	3	△
F16.06	LED displayed parameters setting 4 on running status	0～99(correspond U00.00～U00.99)	2	△
F16.07	LED displayed parameters setting 1 on stop status	0～99(correspond U00.00～U00.99)	1	△
F16.08	LED displayed parameters setting 2 on stop status	0～99(correspond U00.00～U00.99)	6	△
F16.09	LED displayed parameters setting 3 on stop status	0～99(correspond U00.00～U00.99)	15	△
F16.10	LED displayed parameters setting 4 on stop status	0～99(correspond U00.00～U00.99)	16	△
F16.11	Speed display coefficient	0.00~100.00	1.00	△
F16.12	Power display coefficient	0.0~300.0%	100.0 %	△
U00 Group: Status Monitoring				

U00.00	Output Frequency	0.00～Fup	0.00Hz	⊙
U00.01	Setting Frequency	0.00～Fmax	0.00Hz	⊙
U00.02	Actual value of output voltage	0～660V	0.0V	⊙
U00.03	Actual value of output current	0.0～3000.0A	0.0A	⊙
U00.04	Output Power	-3000.0～3000.0kW	0.0kW	⊙
U00.05	Output Rotation-rate	0～60000rpm	0rpm	⊙
U00.06	DC Bus Voltage	0～1200V	0V	⊙
U00.07	Synchronization Frequency	0.00～Fup	0.00Hz	⊙
U00.08	PLC Stage	1～15	1	⊙
U00.09	Program Running Time	0.0～6000.0s(h)	0.0s(h)	⊙
U00.10	PID Given	0～60000	0	⊙
U00.11	PID Arithmetic Feedback	0～60000	0	⊙
U00.12	DI1～DI5 Input Status	DI5 DI4 DI3 DI2 DI1	00000	⊙
U00.13	DI6～DI7 Input Status	DI7 DI6	00	⊙
U00.14	Digital Output Status	R2R1 Y2 Y1	0000	⊙
U00.15	AI1 Input	0.0～100.0%	0.0%	⊙
U00.16	AI2 Input	0.0～100.0%	0.0%	⊙
U00.17	AI3 Input	-100.0～100.0%	0.0%	⊙
U00.18	Keyboard Potentiometer Input	0.0～100.0%	0.0%	⊙
U00.19	HI Pulse Input Frequency	0.00～100.00kHz	0.00kHz	⊙
U00.20	A01 Output	0.0～100.0%	0.0%	⊙
U00.21	A02 Output	0.0～100.0%	0.0%	⊙
U00.22	HO Pulse Output Frequency	0.00～100.00kHz	0.00kHz	⊙
U00.23	Temperature of Inverter Module	-40.0℃～120.0℃	0.0℃	⊙
U00.24	The Power-on Time	0～65535min	0min	⊙
U00.25	The Running Time	0～6553.5min	0.0min	⊙
U00.26	Cumulative Power-on Time	0～65535h	0h	⊙

U00.27	Cumulative Running Time	0～65535h	0h	⊙
U00.28	Actual Count Value	0～65535	0	⊙
U00.29	Actual Length Value	0～65535m	0m	⊙
U00.30	Line Speed	0～65535m/min	0m/Min	⊙
U00.31	Output Torque	0.0～300.0%	0.0%	⊙
U00.35	Power consumption	0～65535KWh	0	⊙
U01 Group: Failure Record				
U01.00	Current Fault Category	Err00: No Fault	Err00	⊙
		Err01: Accelerated Overcurrent		
		Err02: Decelerated Overcurrent		
		Err03: Constant Speed Overcurrent		
		Err04: Accelerated Overvoltage		
		Err05: Decelerated Overvoltage		
		Err06: Constant Speed Overvoltage		
		Err07: Bus Under voltage Protection		
		Err08: Short Circuit Protection		
		Err09: Input Open Phase		
		Err10: Output Open Phase		
		Err11: Motor Overload		
		Err12: Inverter Overload		
		Err13: Fault protection of external input		
		Err14: Overheat		
		Err15: Memory Failure		
		Err16: Cancel Auto-tuning		
		Err17: Auto-tuning Failure		
		Err18: 485 Communication Timeout		
		Err19: PID feedback disconnection on runtime		
		Err20: running time arrives		
		Err21: Parameter Upload Error		

		Err22: Parameter Download Error		
		Err23: Braking Unit Failure		
		Err24: Disconnection fault of temperature sensor		
		Err25: Lose-load failure/alarm of Inverter		
		Err26: with-wave current limit fault		
		Err27: Soft-start relay unclosed		
		Err28: EEPROM Version Incompatible		
		Err29: Overcurrent tested by hardware		
		Err30: Overvoltage tested by hardware		
		Err32:Hydraulic Probe Failure		
		Arn33:Pre-warning of weak light		
		Arn34:Pre-warning of full-water		
U01.01	Output frequency of the current fault	0.00～Fup	0.00Hz	⊙
U01.02	Output current of the current fault	0.0～3000.0A	0.0A	⊙
U01.03	c of the current fault	0～1200V	0V	⊙
U01.04	Cumulative runtime of the current fault	0～65535h	0h	⊙
U01.05	Former one fault category	Like the latest one fault record	Err00	⊙
U01.06	Output frequency of the former one fault	0.00～Fup	0.00Hz	⊙
U01.07	Output current of the former one fault	0.0～3000.0A	0.0A	⊙
U01.08	Bus Voltage of the former one fault	0～1200V	0V	⊙
U01.09	Cumulative runtime of the former one fault	0～65535h	0h	⊙

U01.10	Former two fault categories	Like the latest one fault record	Err00	⊙
U01.11	Output frequency of the former two faults	0.00～Fup	0.00Hz	⊙
U01.12	Output current of the former two faults	0.0～3000.0A	0.0A	⊙
U01.13	Bus Voltage of the former two faults	0～1200V	0V	⊙
U01.14	Cumulative runtime of the former two faults	0～65535h	0h	⊙
U01.15	Previous 3 categories of faults	The same with U01.00	Err00	⊙
U01.16	Previous 4 categories of faults	The same with U01.00	Err00	⊙
U01.17	Previous 5 categories of faults	The same with U01.00	Err00	⊙
U01.18	Previous 6 categories of faults	The same with U01.00	Err00	⊙
U01.19	Previous 7 categories of faults	The same with U01.00	Err00	⊙
U01.20	Previous 8 categories of faults	The same with U01.00	Err00	⊙
U01.21	Previous 9 categories of faults	The same with U01.00	Err00	⊙
H00 Group: PV Pump Special Set				
H00.00	Pump Machine Control	0：Null 1：Valid	1	×
H00.01	Selection of Inverter Power	0：Mains 1：Solar Panel	1	×
H00.02	Vmpp Selection of Voltage Given Mode	0：CVT（Constant Voltage appr Given） 1：Tracking of Max Power Point（MPPT） 2：Automatic MPPT	2	×
H00.03	Vmpp voltage CVT setting	0～750V	540V	△

H00.04	Mini voltage reference of MPPT	0～Max Voltage	500V	×
H00.05	Max voltage reference of MPPT	Max Voltage～750V	600V	×
H00.06	PID Filter Time Given	0.000～10.000s	0.000s	△
H00.07	PID Filter Time Feedback	0.000～10.000s	0.000s	△
H00.08	PID Filter Time Output	0.000～10.000s	0.000s	△
H00.09	Ratio Gain Kp1	0.00～100.00	0.10	△
H00.10	Points Time KI	0.00～100.00	0.10	△
H00.11	PID Upper Limit of Output Frequency	PID Lower Limit of Output Frequency～100.0%（100.0% corresponds to the max frequency）	100.0 %	×
H00.12	PID Lower Limit of Output Frequency	0.0%～PID Upper Limit of Output Frequency	20.0%	×
H00.13	Dormant Delay Time of Weak light Pre-warning	0.0～6000.0s	600.0s	△
H00.14	Wake-up Delay Time of Weak Light	0.0～6000.0s	100.0s	△
H00.15	Feedback Channel Selection of Reservoir Water Level	0：Null 1：AI1 2：AI2 3：AI3	0	×
H00.16	Clean up the delay time of full-water pre-warning	0～10000s	600s	△
H00.17	Threshold of reservoir water level	0.0～100.0	25.0%	△
H00.18	Dormant Delay Time of Overtank Pre-warning	0～10000s	60s	△
H00.19	Detection of reservoir hydraulic probe	0.0～100.0	100.0 %	△
H00.20	Pre-warning delay time of pump under-load	0.0～1000.0s	60.0s	△

H00.21	Pre-warning current level of pump under-load	0.0～100.0% 0.0：Null	0.0%	△
H00.22	Reset delay time of pump under-load	0.0～1000.0s	60.0s	△
H00.23	Threshold of lag-frequency	0.00～200.00Hz	0.30Hz	△
H00.24	Water level direction detection	0：Positive direction，higher detection value higher water level 1：Negative position，higher detection value lower water level	1	×
H00.25	Weak light voltage	250V～MPPT minimum voltage	300V	×
H00.26	Frequency given mode	0: Maximum frequency 1: Master frequency given mode	0	×
H00.27	Power automatic switch function	0:disable 1:Enable	0	×
H00.28	Time of automatic switch to solar power	1～600Min	60Min	△
H00.29	Automatic switch delay	0.1～10.0s	3.0s	△
H00.30	Current power source in automatic switch function	0: Grid power 1: Solar power	0	⊙
H00.31	Pump rated flow Q_N	0.0～1000.0 m3/h	6.0 m3/h	△
H00.32	Pump rated head H_N	0.0～500.0m	24m	△
H00.33	Pump cumulative flow zero clearing	0: Invalid 1: Valid	0	△
H00.34	Pump current flow	$Q = Q_N * f / f_N$ (m3/h)	0.0 m3/h	⊙
H00.35	Pump current head	$H = 0.9H_N * (f / f_N)^2$ (m)	0.0 m	⊙
H00.36	Pump cumulative flow	Unit: m3	0 m3	⊙

3.2 H00 Group: Detailed Explanation of Function Code

H00.00	Control of PV Pump Inverter	0：Null 1：Valid	1	×

0：Null

For standard model

1：Valid

For PV pumps special inverter，H00 Group: Invalid

H00.01	Selection of inverter power supply	0：Mains 1：PV Panels	1	×

0：Mains

Inverter power supply through the grid, frequency given refer to group of F01, HOO.02～H00.12 invalid.

1：PV Panels

Inverter power supply through solar panels, frequency given mainly through tracking and adjusting the max power-point PI of solar panels to get.For more details, please refer to H00.02～H00.12.

H00.02	Vmpp selection of power given mode	0：CVT（Constant Voltage appr Given） 1：Max Power Point Tracking（MPPT） 2：Automatic MPPT	2	×

0：CVT（Constant Voltage appr Given）

Adopt voltage given mode; reference voltage is a fixed value, given by H00.03.

1：Max power point tracking（MPPT）

Using max power point tracking the given reference voltage, the reference voltage will not stop changing until the system stable，the maximum power point of this searching mode is limited by range of H00.04 and H00.05

2：Automatic MPPT

System track the maximum power point automatically, adaptive to different solar panel, can track and get maximum power point rapidly.

No matter which reference voltage mode adopted, when bus voltage higher than reference voltage, the target frequency will change to upper limit of PI output frequency; when bus voltage lower than reference voltage, target frequency will change to lower limit of PI output frequency.

H00.03	Vmpp voltage CVT setting	0～750V	540V	△

When H00.02 is zero, reference voltage will be given by this function code.

H00.04	MPPT mini voltage reference	0～Max Voltage	500V	×
H00.05	MPPT max voltage reference	Max Voltage～750V	600V	×

When H00.03 is 1, MPPT voltage will track within H00.04~H00.05, H00.05 must be larger than

H00.04, the smaller the difference between them, the narrower the tracking range, tracking will be faster. But the voltage point of max power must fall in this range.

H00.06	PID Given Filter Time	0.000～10.000s	0.000s	△
H00.07	PID Response Filter Time	0.000～10.000s	0.000s	△
H00.08	PID Output Filter Time	0.000～10.000s	0.000s	△
H00.09	Ratio Gain Kp1	0.00～100.00	0.10	△
H00.10	Points Time KI	0.00～100.00	0.10	△
H00.11	PID Upper limit of output frequency	PID Lower limit of output frequency～100.0%（100.0% corresponds to the max frequency）	100.0%	×
H00.12	PID Lower limit of output frequency	0.0%～PID Upper limit of output frequency	20.0%	×

Refer to F13 group of PID function description in FR200 user manual.

H00.13	Delay time of weak light pre-warning sleep	0.0～6000.0s	600.0s	△
H00.14	Delay time of weak light wake-up	0.0～6000.0s	100.0s	△

When the output frequency less than or equal with the lower limit of PI output frequency (H00.12), delaying timing begins, continuing this state until delay time of weak light pre-warning (H00.13) arrives, weak-light pre-warning reported (Arn33), and start dormant.

In weak light pre-warning, when output frequency larger than lower limit of PI output frequency, delaying timing begins, and continue this status until arrival delay time （H00.14）of wake-up at weak light, clean the weak light pre-warning, re-enter the running status.

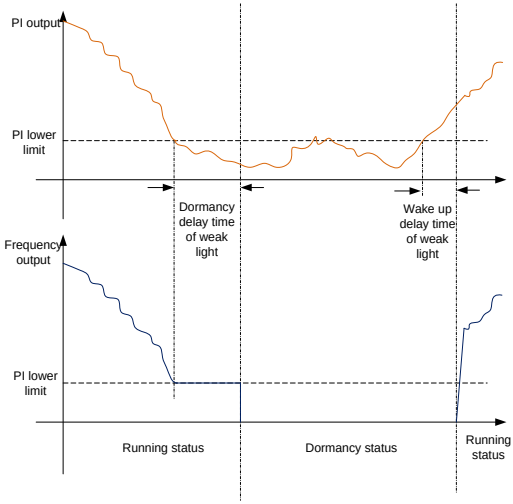

Figure 3-1 Weak light dormancy & wake up

H00.15	Feedback channel selection of reservoir water level	0：Null	0	×
		1：AI1		
		2：AI2		
		3：AI3		

0：Null

Control of water level is invalid.

1：AI1

AI1 for analog signal source of water-level control

2：AI2

AI2 for analog signal source of water-level control

3：AI3

AI3 for analog signal source of water-level control

H00.16	Clean up the delay time of overtank pre-warning	0～10000s	600s	△
H00.17	Reservoir full of water control	0.0～100.0	25.0%	△
H00.18	Dormancy delay time of reservoir full of water pre-warning	0～10000s	60s	△

When the detected water level control analog signal less than water level threshold (H00.17), and continue this status over the delay time of H00.18, reporting the pre-warning of water-full (Arn34), and dormancy.

In water-full pre-warning, when the detected water level control analog signal larger than H00.17,

delay timer begins, and continue this status over the delay time of H00.16, clear the full-water pre-warning, recover the normal operation.

H00.19	Detection of reservoir hydraulic probe	0.0～100.0	100.0%	△

0.0% means Null.

When not 0.0%, when the detected water level control analog signal larger than H00.19 hydraulic probe damaged point, hydraulic probe fault (Err32) will be reported directly, and stopped.

H00.20	Current level of pump under-load pre-warning.	0.0～100.0% 0.0: Null	0.0%	△
H00.21	Delay time of pump under-load pre-warning.	0.0～1000.0s	60.0s	△
H00.22	Delay time of pump under-load resetting.	0.0～1000.0s	60.0s	△

0.0%: invalid. When not 0.0%, decided by H00.20 parameter setting, 100% correspondence to ratted current of motor.

When absolute value of the difference between target frequency and slop frequency continues less than or equal with H00.23 lag frequency threshold, if the current value continues less than H00.20 set value, over the H00.21 pump under-load delay time, reporting under-load pre-warning(Arn25).
In under-load pre-warning, delay H00.22 under-load reset time, under-load pre-warning restoration.

H00.23	Lag frequency threshold	0.00～200.00Hz	0.30Hz	△

Use for adjusting the condition of under-load operation. When absolute value of the difference between target frequency and slop frequency continues less than or equal with lag frequency threshold, current comparison will be required.

H00.24	Water level direction detection	0：Positive direction，higher detection value higher water level 1：Negative position，higher detection value lower water level	1	×

To set the relationship between hydraulic probe detected signal and water level

0: Positive direction, higher detection value higher water level

1: Negative position, higher detection value lower water level

H00.25	Weak light voltage	250V～MPPT minimum voltage	300V	×

For inverters with 380V, range: 250V～MPPT minimum voltage Default Value:300V

For inverters with 220V, range: 120V～MPPT minimum voltage Default Value:150V

When bus voltage is lower than the value of weak light voltage, inverter will soon entry the statue

of weak light.

H00.26	Frequency given mode	0: Maximum frequency 1: Master frequency given mode	0	×

0：Maximum frequency

Given frequency is the maximum frequency adjusted by MPPT function

1：Master frequency given mode

In frequency range adjusted by MPPT function, given frequency is adjusted by F01.01

H00.27	Power automatic switch function	0:disable 1:Enable	0	×
H00.28	Time of automatic switch to solar power	1～600Min	60Min	△
H00.29	Automatic switch delay	0.1～10.0s	3.0s	△
H00.30	Current power source in automatic switch function	0: Grid power 1: Solar power	0	⊙

When H00.27=1 power automatic switch function is enable, grid power and solar power will be switched automatically in system. When system works with grid power, MPPT function is invalid, speed adjusted by frequency given mode, when running time is over setting time of H00.28, system will stop and switch to solar power then restart. When system works with solar power, MPPT function is valid, when system is under weak light, system will stop and switch to grid power than restart. In every automatic switch, system will stop during the time setting by H00.29 for the switch.

H00.30 shows current power source in automatic switch, wiring as below:

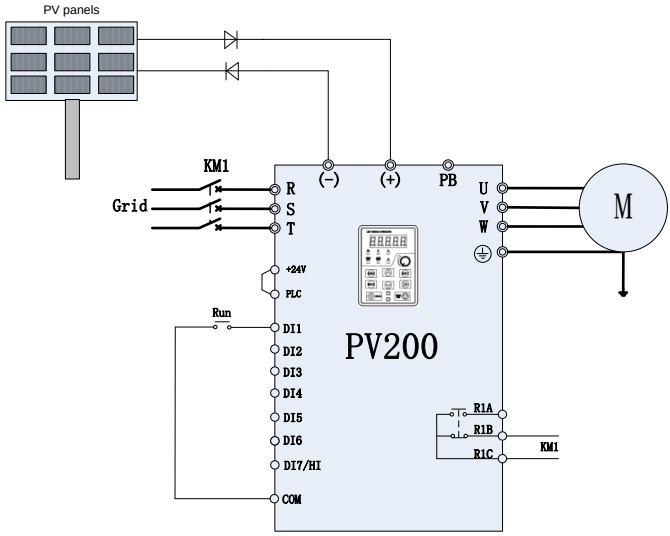

Figure 3-2 Automatic switch between grid and solar power wiring

H00.31	Pump rated flow Q_N	0.0～1000.0 m3/h	6.0 m3/h	△
H00.32	Pump rated head H_N	0.0～500.0m	24m	△
H00.33	Pump cumulative flow zero clearing	0: Invalid 1: Valid	0	△
H00.34	Pump current flow	$Q = Q_N * f / f_N$ (m3/h)	0.0 m3/h	⊙
H00.35	Pump current head	$H = 0.9H_N * (f / f_N)^2$ (m)	0.0 m	⊙
H00.36	Pump cumulative flow	Unit: m3	0 m3	⊙

This group parameter is used to estimate the pump flow and head during operation. To set pump rated flow (H00.31) and pump rated head (H00.32), inverter will automatically estimate the pump current flow and current head according to the operation state, and pump cumulative flow (H00.36) will be recorded. Parameter H00.33 is the function of pump cumulative flow zero clearing and recalculate.

Chapter Four Troubleshooting and Countermeasures

PV200 inverters supply many kinds of warning information and protection functions, when failure occurred, function of protection actives, inverters will stop output, fault relay contact of inverter active, and display the fault code on inverter operation panel. Before asking support, users can self-check according to this chapter tips, and analyze the fault reasons, get the solutions. If fault still can't be solved, please ask for service, contact with agents or directly to FRECON

Operator Panel Displays	Fault Name	Fault Reasons	Troubleshooting
Err01	Acceleration Overcurrent	1、Inverter output circuit grounding or shorted 2、Acceleration time is too short 3、Manually boost the torque or V/F curve unsuitable 4、Voltage is too low 5、Start the rotating motor 6、Shock load on acceleration 7、Inverter selection is too small	1、Peripheral troubleshooting 2、Prolong the acceleration time 3、Adjust the V/F curve Or manually-torque-boost 4、The voltage adjusted to a normal range 5、Select start on rotational-speed tracking or waiting for motor stopped 6、Cancel shock-load 7、Select inverter with a larger power
Err02	Deceleration Overcurrent	1、Inverter output circuit grounding or shorted 2、Deceleration time is too short 3、Voltage is too low 4、Shock load on deceleration 5、No installation of braking resistor	1、Peripheral troubleshooting 2、Prolong the deceleration time 3、The voltage adjusted to a normal range 4、Cancel shock-load 5、Install braking resistor
Err03	Constant-speed Overcurrent	1、Inverter output circuit grounding or shorted 2、Voltage is too low 3、If there is shock-load during running	1、Peripheral troubleshooting 2、The voltage adjusted to a normal range 3、Cancel shock-load

		4、Inverter selection is too small	4、Select inverter with a larger power
Err04	Acceleration Overvoltage	1、Input voltage is high 2、There is an external force during acceleration dragging the motor to work 3、Acceleration time is too short 4、No installation of braking resistor	1、The voltage adjusted to a normal range 2、Cancel the external power or install braking resistor 3、Prolong the acceleration time 4、Install braking resistor
Err05	Deceleration Overvoltage	1、Input voltage is high 2、There is an external force during deceleration dragging the motor to work 3、Deceleration time is too short 4、No installation of braking resistor	1、The voltage adjusted to a normal range 2、Cancel the external power or install braking resistor 3、Prolong the deceleration time 4、Install braking resistor
Err06	Constant-speed Overvoltage	1、Input voltage is too high 2、There is an external force during running dragging the motor to work	1、The voltage adjusted to a normal range 2、Cancel the external power or install braking resistor
Err07	Bus Under voltage protection	1、Momentary power failure 2、The inverter input voltage 3、Bus voltage abnormal 4、Rectifier bridge and buffer resistance are abnormal 5、Drive board abnormal 6、Control panel abnormal	1、Reset Failure 2、Adjust voltage to normal range 3、Ask for technical support 4、Ask for technical support 5、Ask for technical support 6、Ask for technical support
Err08	Short circuit protection	1、Inverter output circuit shorted 2、Acceleration/ Deceleration time is too short 3、Wirings between motor and inverter is too long 4、Module Overheating 5、Internal wirings of inverter	1、Peripheral troubleshooting 2、Prolong the acceleration/deceleration time 3、Install the reactor or output-filter 4、Check and confirm the

		loosened 6、Main Board Abnormal 7、Drive Board Abnormal 8、Inverter Module Abnormal	air-channel unblocked, fans operation normal 5、All cables plugged 6、Ask for technical support 7、Ask for technical support 8、Ask for technical support
Err09	Input Open-phase	1、Power of three-phase-input is abnormal 2、Drive board abnormal 3、Lightning board abnormal 4、Main board abnormal	1、Check and solve the problems in peripheral wirings 2、Ask for technical support 3、Ask for technical support 4、Ask for technical support
Err10	Output Open-phase	1、Lead-wire from inverter to motor is abnormal 2、Three-phase output of inverter is unbalanced during motor-running 3、Drive board abnormal 4、Inverter Module Abnormal	1、Peripheral troubleshooting 2、Check and confirm the motor three-phase winding to be normal 3、Ask for technical support 4、Ask for technical support
Err11	Motor Overload	1、Motor-protection parameters F11.17 set incorrectly 2、Load is too large or motor rocked rotor 3、Inverter selection is too small	1、Setting the parameters correctly 2、Lowering the load and check the conditions of motor and mechanical 3、Select inverter with a larger power
Err12	Inverter Overload	1、Load is too large or motor rocked rotor 2、Inverter selection is too small	1、Reduce load and check the conditions of motor and mechanical 2、Select inverter with a larger power
Err13	Fault protection of external input	1、Input the external fault signal by multi-function terminal	1、Reset to run
Err14	Overheat	1、Ambient temperature is too high 2、Air-channel blocked 3、Fans damaged 4、Module thermistors	1、Lowering the ambient temperature 2、Clean up the air-channel 3、Replace the fans 4、Replace the thermistors

		damaged 5、Inverter module damaged	5、Replace the inverter module
Err15	Memory Failure	1、EEPROM Chips damage	1、Replace the Main Board
Err16	Cancel the self-identification	1、Press the button of STOP/RST during self-identification	1、Press STOP/RST for restoration
Err17	Self-identification failure	1、Motor and the inverter output terminals are not connected 2、Motor connects to load 3、Motor Failure	1、Check the wirings between inverter and motor 2、Motor breaks away from load 3、Check motor
Err18	485 Communication Timeout	1、Upper computer works abnormally 2、Communication cable is abnormal 3、F15 communication parameters set incorrectly	1、Check the wirings of upper computer 2、Check the communication cable 3、Set the communication parameters correctly
Err19	PID feedback disconnection on running	1、PID feedback lower than the value set by F13.24	1、Check the PID feedback signal or set F13.24 to be a suitable value
Err20	The running time arrives	1、Setting the function of running time arrives	1、Refer to description of F05.14
Err21	Parameter Upload Error	1、Copy card uninstalled or plugged unsuitable 2、Parameters copy card abnormal 3、Control board abnormal	1、Parameter copy card installed correctly 2、Ask for technical support 3、Ask for technical support
Err22	Parameter Download Error	1、Copy card uninstalled or plugged unsuitable 2、Parameters copy card abnormal 3、Control board abnormal	1、Parameter copy card installed correctly 2、Ask for technical support 3、Ask for technical support
Err23	Braking Unit failure	1、Braking wirings fault or braking tube damaged 2、Value of external braking resister is too small	1.Check the brake unit, and replace the new brake tube 2. Increasing the braking resistor
Err24	Disconnection Fault of	1、Temperature sensor failure or cable break	1、Ask for technical support

	temperature sensor		
Err25	Inverter loss-load	1、Running current of inverter is less than F11.22	1、Confirm whether the load loss or parameters of F11.22、F11.23 conform to the actual running conditions.
Err26	With-wave current limit fault	1、Load is too large or motor rocked-rotor 2、Inverter selection is too small	1、Reduce the load or check the conditions of motor or mechanical 2、Select the inverter with larger power
Err27	Soft-start relay unclosed	1、Grid voltage is too low 2、Rectifier module failure	1、Check the grid voltage 2、Ask for technical support
Err28	EEPROM Version Incompatible	1、Parameter version of up/download module is inconsistent with the one of control panel	1、Re-upload parameters to up/download modules
Err29	Hardware detect Overcurrent	1、Acceleration/Deceleration time is too short 2、Motor Parameters is Inaccurate 3、Hardware failure of Inverter	1、Prolong the acceleration/deceleration time 2、Setting the correct motor parameter 3、Ask for technical support
Err30	Hardware detect overvoltage	1、Deceleration time is too short 2、No installation of braking resistors 3、Hardware failure of Inverter	1、Prolong the deceleration time 2、Install the braking resistor 3、Ask for technical support
Err32	Hydraulic Probe Failure	Hydraulic Probe Failure	Hydraulic Probe Changed
Arn33	Pre-warning of Weak Light	Output frequency lower than or equal with lower limit of PI output frequency, and continues this status until arrives at delay time of weak light.	Check the lower limit of PI output frequency and weak-light delay theset value

Arn34	Pre-warning of Full-water	Water-lever feedback lower than the set threshold, and continue to the delay time	Check the pre-warning point of water level